CAMERA BRAKET **STB-4150V**

eco
RoHS compliant

Samsung Techwin cares for the environment at all product manufacturing stages to preserve the environment, and is taking a number of steps to provide customers with more environment-friendly products.The Eco mark represents Samsung Techwin's will to create environment-friendly products, and indicates that the product satisfies the EU RoHS Directive.

●Product Standard

Item	Standard
Model Name	STB-4150V
Purpose	Indoor camera bracket
Product Name	CAMERA BRACKET
Features	An environmentally friendly product which has faithfully followed regulations for restriction of use for hazardous substances, and has the following features: strong anti-corrosion, aluminum is used for the main material, robust, various installation structures.
Conditions for use	Indoor humidity (below 60%)
Surface treatment	Chromate+primer+liquid coating
Dimensions	80 X 80 X 155.4
Weight	0.4KG
Materials	Body : Aluminum, HANDROUND: incombustible ABS
Components	SCR TAP1 5X30 TH(+)SUS-4ea, Hammer-in anchors(FD5) 5X30-4ea

●External View

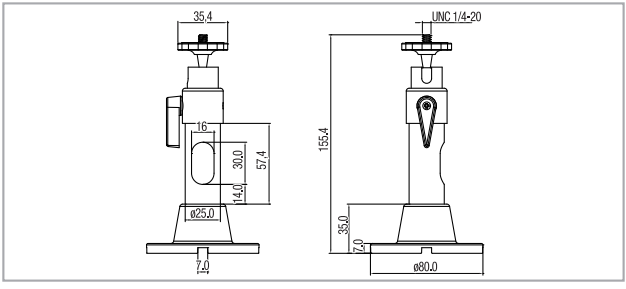

CAUTION

- Do not install the product where salinity and sulfurous acid gasses are generated.
- Follow the safety regulations using the appropriate tools and wires during installation.

Product Components

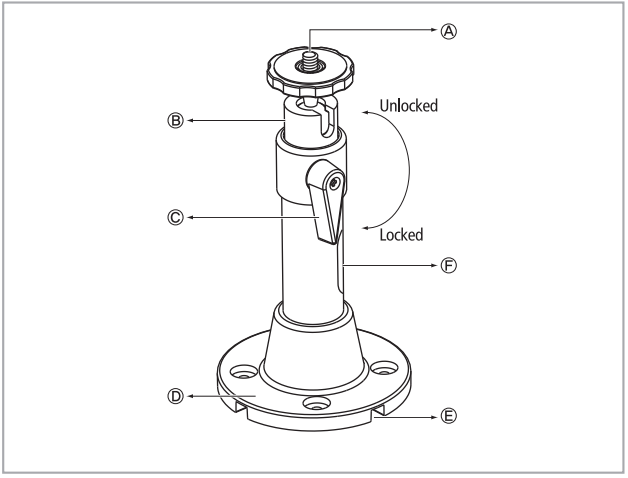

Ⓐ - where the camera is mounted.
Ⓑ - used when adjusting the position of the camera to the left or the right (use Ⓒ in the unlocked position).
Ⓒ - a device which adjusts or fixes the positions of Ⓐ and Ⓑ.
Ⓓ - a base which fixes the bracket to a wall or ceiling.
Ⓔ - a groove to arrange cables running from the ceiling.
Ⓕ - a hole to connect the cable which runs through Ⓔ to the camera.

*** Insert cables one by one to ensure that cables don't get stuck in the hole.**

SAMSUNG TECHWIN CO., LTD.
145-3, Sangdaewon-dong, Jungwon-gu, Seongnam-si, Gyeonggi-do, 462-120, Korea
TEL : +82-31-740-8151~8158 FAX : +82-31-740-8145
• www.samsungtechwin.com / www.samsungcctv.com